KEYMAN

ALL DIMENSIONS IN MM

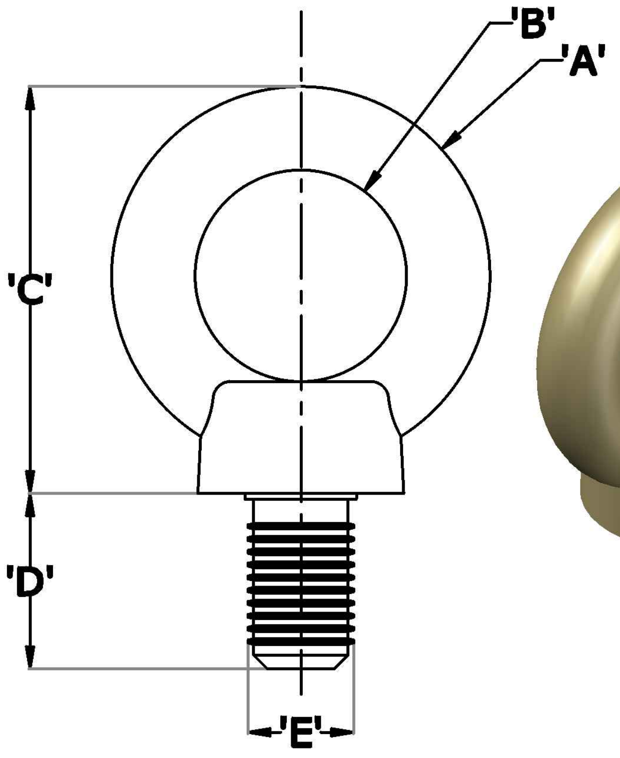

KEYMAN EYE BOLT					
MODEL NO.	'A'	'B'	'C'	'D'	'E'
KP 31.01	34	17	37	14	M8
KP 31.02	42	22	45	18	M10
KP 31.03	51	28	52	20	M12
KP 31.04	61	35	58	29	M16
KP 31.05	68	38	71	31	M20
KP 31.06	90	50	91	38	M24
KP 31.07					M30
KP 31.08					M36
KP 31.09					M42
KP 31.10					M48
KP 31.11					M56
KP 31.12					M64

APPLICATION DRAWING FOR MODEL NO. KP 31.01 TO KP 31.12 (EYE BOLT)

KEYMAN
ALL RIGHTS RESERVED IN FAVOUR
OF KEYMAN LOCKING DEVICES
YEAR : 2023