ALL DIMENSIONS IN MM

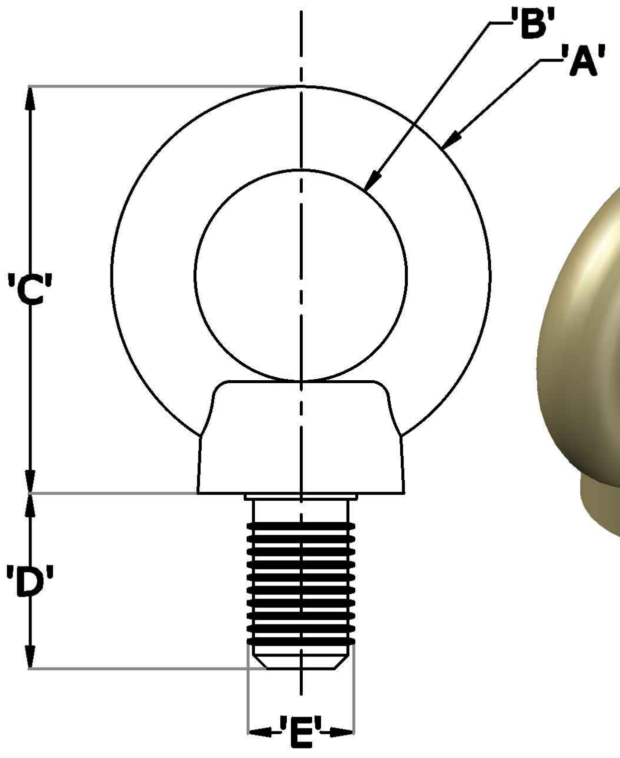

MODEL NO.	'A'	'B'	'C'	'D'	'E'
KEYMAN S.S. 304 EYE BOLT					
KP 35.01	34	19	36	17	M8
KP 35.02	43	24	45	19	M10
KP 35.03	50	28	53	23	M12
KEYMAN C15E CARBON STEEL EYE BOLT					
KP 36.01	36	19	36	15	M8
KP 36.02	45	25	45	17	M10
KP 36.03	54	30	53	21	M12

APPLICATION DRAWING FOR MODEL NO. KP 35.01 TO KP 35.03 & 36.01 TO 36.03 (EYE BOLTS)

ALL RIGHTS RESERVED IN FAVOUR OF KEYMAN LOCKING DEVICES YEAR : 2023